Chelsea PTO 660/680 Parts Manual

Pro Gear Chelsea 660/680 Series PTO parts manual to assist in identifying the parts for your Chelsea Power Take Off unit.

If you need any assistance identifying the correct Power Take Off unit for your truck and equipment, contact your Chelsea replacement part specialists at Pro Gear and Transmission.

Pro Gear stocks every part for your Parker Chelsea PTO including: PTO housings, mounts, driveshafts, gears, bearings, gaskets, cable shift cover assembly, post and plate assembly, brackets, stud kits, seal kits, lever control assembly, air shift cover assembly, direct mount pump conversion kits, stud kits including English and metric references, CAT D&H parts and much more.

Pro Gear Transmission has same day shipping and 1000’s of products in stock and ready to ship internationally for your next project.

For parts or service contact the Chelsea specialists at Pro Gear & Transmission, Inc.

1 (877) 776-4600
(407) 872-1901
parts@eprogear.com

CLICK TO RETURN TO SITE

CHELSEA®
Parts List
660/680 Series

Bulletin HY25-2660-M1/US

Effective: June 15, 2005
Supersedes: HY25-2660-M1/US Dated May. 2004

Pro Gear and Transmission • 906 W. Gore St. Orlando, FL 32805 • 1 (877) 776-4600 / (407) 872-1901 • parts@eprogear.com

⚠ WARNING

FAILURE OR IMPROPER SELECTION OR IMPROPER USE OF THE PRODUCTS AND/OR SYSTEMS DESCRIBED HEREIN OR RELATED ITEMS CAN CAUSE DEATH, PERSONAL INJURY AND PROPERTY DAMAGE.

This document and other information from Parker Hannifin Corporation, its subsidiaries and authorized distributors provide product and/or system options for further investigation by users having technical expertise. It is important that you analyze all aspects of your application and review the information concerning the product or system in the current product catalog. Due to the variety of operating conditions and applications for these products or systems, the user, through its own analysis and testing, is solely responsible for making the final selection of the products and systems and assuring that all performance, safety and warning requirements of the application are met.

The products described herein, including without limitation, product features, specifications, designs, availability and pricing, are subject to change by Parker Hannifin Corporation and its subsidiaries at any time without notice.

Offer of Sale

The items described in this document are hereby offered for sale by Parker Hannifin Corporation, its subsidiaries or its authorized distributors. This offer and its acceptance are governed by the provisions stated in the "Offer of Sale".

© Copyright 2005, Parker Hannifin Corporation, All Rights Reserved

Exploded View 1
Bill of Materials 2-3
Air Control Parts ("A" Designator) 4
Shifter Kit 5
Assembly Arrangements 5
Model Number Designation 6
Constant Mesh 7
Self Lube Parts 7
Input Gear Data 8
Direct Mount Pump Conversion Kits 9
Output Options Bills of Materials 10-13
Dimensions 14
Assembly Arrangements 14
Pump Flange & Shaft Dimensions 15
Offer of Sale 16

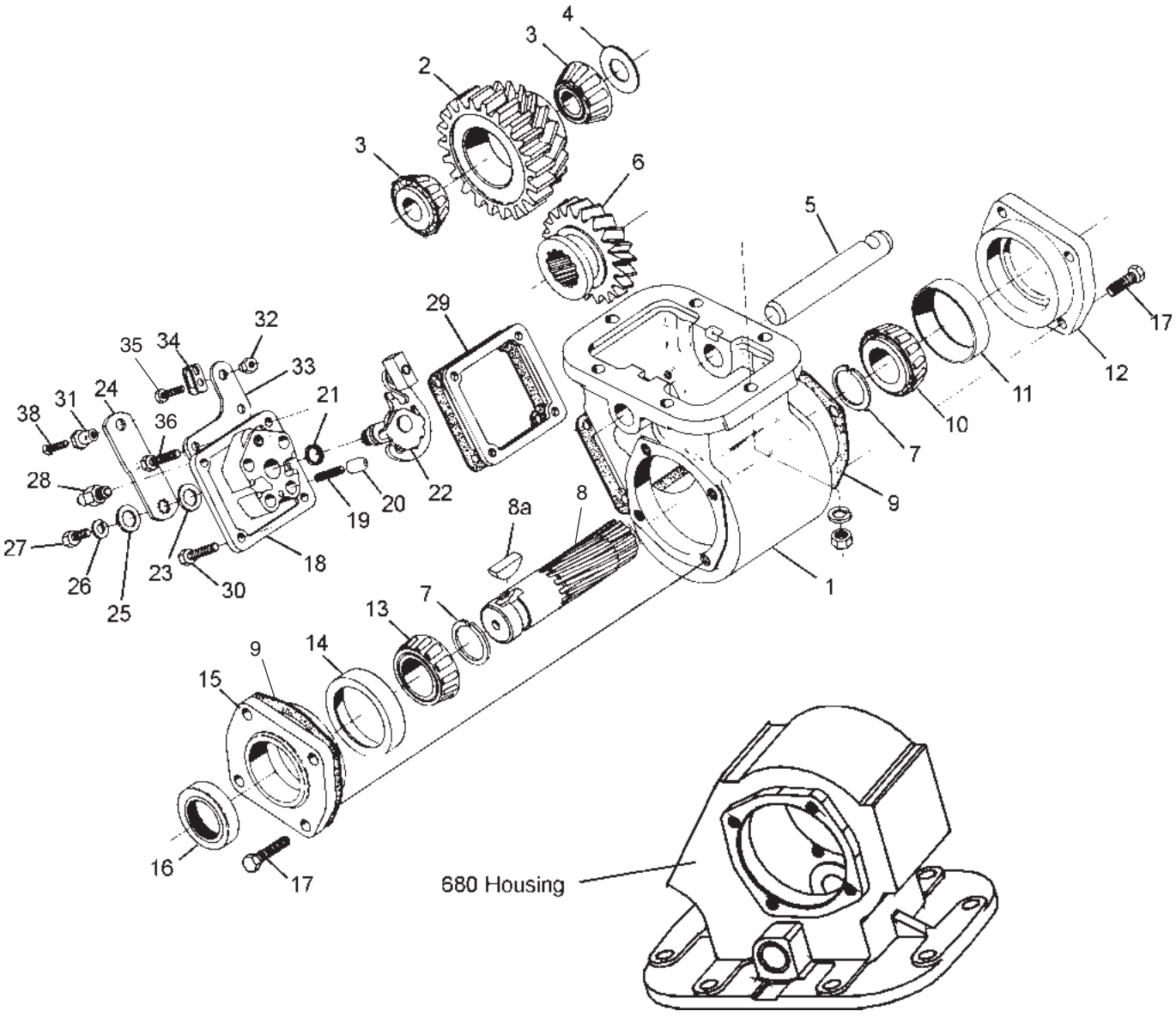
4
3
2
3
6
5
29
32
35
34
33
31
24
21
38
36
28
27
26
25
23
30
18
19
20
22
8a
8
7
13
14
9
15
16
17
1
7
9
10
11
12
17
680 Housing

Item	Part Number	Description	Quantity	
			660	680
1	**1-P-580**	Housing, Standard Mount ("X" & "G" Mounting)	1 or	-
	1-P-581	Housing, Deep Mount ("Z" Mounting)	1	-
	1-P580XD	Housing, Standard Mount w/ Dowel Pins	1	-
	1-P-573	Housing, Standard Mount ("X" & "G" Mounting)	-	1 or
	1-P-582	Housing, Deep Mount ("Z" Mounting)	-	1
2	**See Chart Page 8**	Input Gear	1	1
3	**550439**	Bearing Cone, Input	2	2
4	**14-P-74-2**	Spacer (.115-.117)	A.R.	A.R.
	14-P-74-3	Spacer (.118-.120)	A.R.	A.R.
	14-P-74-4	Spacer (.121-.123)	A.R.	A.R.
	14-P-74-5	Spacer (.124-.126)	A.R.	A.R.
5	**9-P-71**	Idler Shaft, Pressure Lube	1 or	1 or
	9-P-60	Idler Shaft	1	1
6	**See Chart Page 8**	Output Gear	1	1
7	**378391**	Lockring	2	2
8	**3-P-202**	Drive Shaft, Output (1-1/4" Round)	1	1
8a	**500007-29**	Woodruff Key ("XD" Output)	1	1
9	**22-P-24-1**	Bearing Cap Gasket (.010)	A.R.	A.R.
	22-P-24-2	Bearing Cap Gasket (.020)	A.R.	A.R.
	22-P-24-3	Bearing Cap Gasket (.015)	A.R.	A.R.
10	**550532**	Bearing Cone	1	1
11	**550221**	Bearing Race	1	1
	See Chrt Pgs 10-13	Bearing Cap (Closed End)		
	329274X	Bearing Cap Ass'y, Closed End (See Chart Pages 11-14 for "L" & "G' Options)	1	1
12	**21-P-131**	Bearing Cap Ass'y, Closed End	1	1
13	**550397**	Bearing Cone (Output)	1	1
14	**550221**	Bearing Race (Output)	1	1
	See Chrt Pgs 10-13	Bearing Cap (Open End)		
	329273X	Bearing Cap Ass'y, Open End (See Chart Page 11-14 for Other Options)	1	1
15	**21-P-130**	Bearing Cap, Open End ("XD" Output)	1	1
16	**28-P-216**	Oil Seal, Standard Output Shaft	1	1
17	**378430-10**	Hex Capscrew .312"-18 x 1.000"	4	4
		CABLE CONTROL COVER ASSEMBLIES For Ratios Q & W		
	329119-1X	Assemblies 3 & 6	1	1
	329119-2X	Assemblies 4 & 5	1	1
		FOR RATIOS F & S & U		
	329121-1X	Assemblies 3 & 6	1	1
	329121-2X	Assemblies 4 & 5	1	1
		All the shift cover assemblies shown include items 18 thru 21		
18	**34-P-74**	Shifter Cover	1	1
19	**37-P-19**	Spring	1	1
20	**63-P-16**	Poppet Pin	1	1
21	**28-P-191**	O-Ring	1	1
		POST & PLATE ASS'Y FOR RATIOS Q & W		
22	**329118-1X**	For Assemblies 3 & 6	1	1
	329118-2X	For Assemblies 4 & 5	1	1
		POST & PLATE ASS'Y FOR RATIOS F & S & U		
22	**329120-1X**	For Assemblies 3 & 6	1	1
	329120-2X	For Assemblies 4 & 5	1	1
23	**378004**	Flat Washer	1	1
24	**51-P-22**	Shifter Lever	1	1
25	**500365-22**	Flat Washer	1	1
26	**500356-10**	Lock Washer	1	1
27	**500409-6**	Hex Capscrew	1	1
28	**379639**	Indicator Switch, Pin Style	1	1
29	**35-P-8**	Gasket, Shift Cover	1	1
30	**378430-9**	Hex Capscrew .312"-18 x .875"	4	4

N.S. — Not Shown A.R. — As Required

Item	Part Number	Description	Quantity	
			660	680
		Parts Shipped Loose		
	328170-200X	Stud Kit, Standard/Deep Mount	-	1
	328170-201X	Stud Kit, Metric Standard Mount	-	1
	328170-76X	Stud Kit, Standard Mount	1	-
	328170-77X	Stud Kit, Deep Mount	1	-
	7170-78X	Stud Kit, Metric Mount	1	-
	7170-72X	Stud Kit, Metric w/Dowel Pin	1	-
	328346-10X	Cable Control Assembly (Includes 378441-10 Cable and 378502 Knob)	1	1
	328380X	Wire Control Parts Bag (contains items 31 - 36)	1	1
31	**378019**	Pivot Pin	1	1
32	**378326**	Hex Nut (.250" - 20)	1	1
33	**50-P-17**	Mounting Bracket	1	1
34	**50-P-19**	Swivel Bracket	1	1
35	**500396-8**	Hexhead Screw (.250" -20 x .750")	1	1
36	**500568-4**	Set Screw (.250" - 20 x .500")	1	1
	329245X	Shifter Bracket Kit (Special Shift Control And Kit)	1	1
	328388-37X	Air Shift Installation Kit (“A”)	1	1
	328388-47X	Electric/Air Installation Kit 12V (“P”)	1	1
	328388-48X	Electric/Air Installation Kit 24V (“Q”)	1	1
	328388-65X	Air Shift With Control Valve (“S”)	1	1
	328388-72X	Air Shift With Control Valve (“T”)	1	1
	328751-1X	Indicator Light Installation Kit	1	1
	68-P-18	Name Plate	1	1
	378978	12V Indicator Light	1	1
	379900	10-AMP Fuse Holder	1	1
	379252	Butt Connector	2	2
	379640	Booted Connector	1	1
	328948-6X	Gaskets & Installation Instructions	1	-
	328948-8X	Gaskets & Installation Instructions	-	1
		Service And Repair Kits		
	329202X	Indicator Switch Connector Service Kit (Includes 379639, 379640 & 379252)	1	1
	329218X	Indicator Switch Service Kit (Includes 379640 & 379252)	1	1
	328356-15X	Shifter Cover Seal Kit (Cable Control)	1	1
	328356-17X	Shifter Cover Seal Kit (Air Shift)	1	1
	328356-26X	Shifter Cover Seal Kit (Lever Control)	1	1
	329143X	Shifter Shaft Cover Kit (Includes Items 43, 44, 45 on pg. 4)	1	1
	329303-1X	Seal Kit (Output Options XD, RA, XE, XG, XJ, XK, XL, RB, XM, XN XO, XP, XQ, XR, AA, AK, XX, LA, LB, LC, LD, LE and LF)	1	-
	329303-2X	Seal Kit (Output Options AF and FF)	1	-
	329303-3X	Seal Kit (Output Options XY and AZ)	1	-
	329303-4X	Seal Kit (Output Options GA, GB and GR)	1	-
	329303-5X	Seal Kit (Output Options GF)	1	-
	329303-6X	Seal Kit (Output Options XD, RA, XE, XG, XJ, XK, XL, RB, XM, XN XO, XP, XQ, XR, AA, AK, XX, LA, LB, LC, LD, LE and LF)	-	1
	329303-7X	Seal Kit (Output Options AF and FF)	-	1
	329303-8X	Seal Kit (Output Options XY and AZ)	-	1
	329303-9X	Seal Kit (Output Options GA, GB and GR)	-	1
	329303-10X	Seal Kit (Output Options GF)	-	1
	329310-1X	Bearing And Seal Kit (Output Options XD, RA, XE, XG, XJ, XK, XL, RB, XO, XP, XQ, XR, AA, AK, XX, LA, LB, LC, LD and LF)	1	-
	329310-2X	Bearing And Seal Kit (Output Options AF and FF)	1	-
	329310-3X	Bearing And Seal Kit (Output Options XY and AZ)	1	-
	329310-4X	Bearing And Seal Kit (Output Options GA, GB and GR)	1	-
	329310-5X	Bearing And Seal Kit (Output Options GF)	1	-
	329310-6X	Bearing And Seal Kit (Output Options XD, RA, XE, XG, XJ, XK, XL, RB, XO, XP, XQ, XR, AA, AK, XX, LA, LB, LC, LD and LF)	-	1
	329310-7X	Bearing And Seal Kit (Output Options AF and FF)	-	1
	329310-8X	Bearing And Seal Kit (Output Options XY and AZ)	-	1
	329310-9X	Bearing And Seal Kit (Output Options GA, GB and GR)	-	1
	329310-10X	Bearing And Seal Kit (Output Options GF)	-	1

N.S. - Not Shown

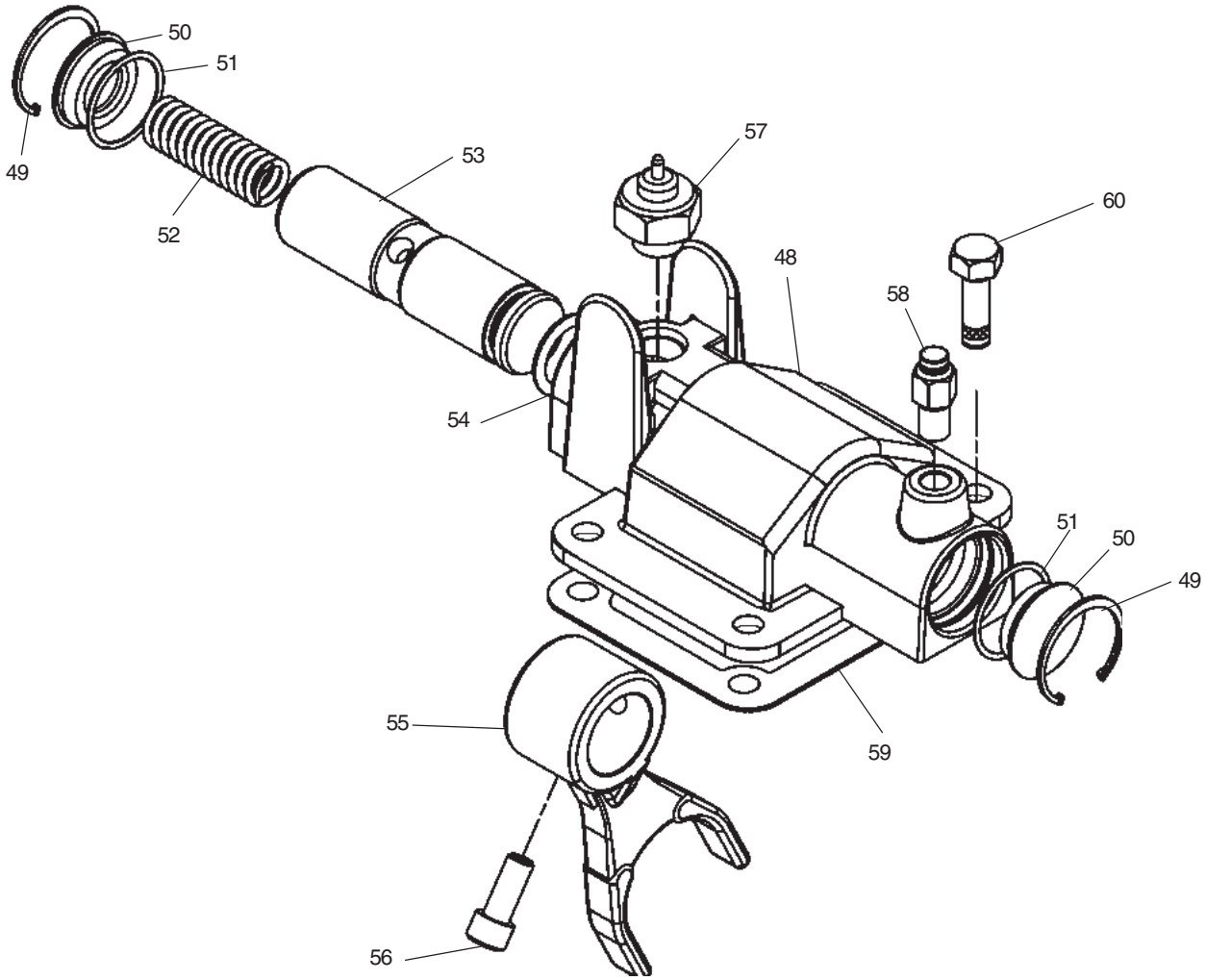

Item	Part Number	Description	Quantity	
			660	680
	329361X	Shifter Cover Assembly, Air Shift (Includes Items 48-57)	1	1
48	**34-P-130**	Shifter Cover	1	1
49	**378316**	Snap Ring	2	2
50	**378315**	Cover Plug	2	2
51	**28-P-42**	O-Ring	2	2
52	**37-P-21**	Shifter Spring	1	1
53	**11-P-75**	Shaft, Shifter	1	1
54	**28-P-41**	O-Ring	1	1
55	**32-P-180**	Shifter Fork	1	1
56	**378447-4**	Capscrew, Socket Head w/ lockpatch (.312"-18 x .750")	1	1
57	**379639**	Indicator Switch (Normally OFF)	1	1
58	**379904**	Push Connect, for 1/4" tubing	1	1
59	**35-P-8**	Gasket, Shifter Cover	1	1
60	**378430-9**	Capscrew, Hex Head (.312"-18 x .875")	4	4
		Air Shift Conversion Kits		
	328390-117X	Lever or Cable to Air	1	1
	328390-119X	Lever or Cable to Electric/Air, 12V	1	1
	328390-120X	Lever or Cable to Electric/Air, 24V	1	1

N.S. - Not Shown

For P.T.O.'s ordered without the shifter (Shifter Type "H"), the kits shown below will provide all the components required to complete the assembly.

Part Number	Description	Quantity	
		660	680
329106-39X	AIR SHIFT ("A" option)	1	1
329106-43X	ELECTRIC/AIR 12V ("P" option)	1	1
329106-45X	ELECTRIC/AIR 24V ("Q" option)	1	1
329106-105X	CABLE SHIFT (Q, W & X Ratios, Ass'y 3 & 6, "W" option)	1	1
329106-106X	CABLE SHIFT (Q, W & X Ratios, Ass'y 4 & 5, "W" option)	1	1
329106-107X	CABLE SHIFT, Less Cable (Q, W, & X Ratios, Ass'y 3 & 6, "X" option)	1	1
329106-108X	CABLE SHIFT, Less Cable (Q, W, & X Ratios, Ass'y 4 & 5, "X" option)	1	1
329106-109X	CABLE SHIFT (F, L, S & U Ratios, Ass'y 3 & 6, "W" option)	1	1
329106-110X	CABLE SHIFT (F, L, S & U Ratios, Ass'y 4 & 5, "W" option)	1	1
329106-111X	CABLE SHIFT, Less Cable (F, L, S & U Ratios, Ass'y 3 & 6, "X" option)	1	1
329106-112X	CABLE SHIFT, Less Cable (F, L, S & U Ratios, Ass'y 4 & 5, "X" option)	1	1
329106-153X	AIR SHIFT ("V" option)	1	1
329143X	DUST COVER KIT FOR LEVER & AIR SHIFTERS	1	1

Assembly Arrangements

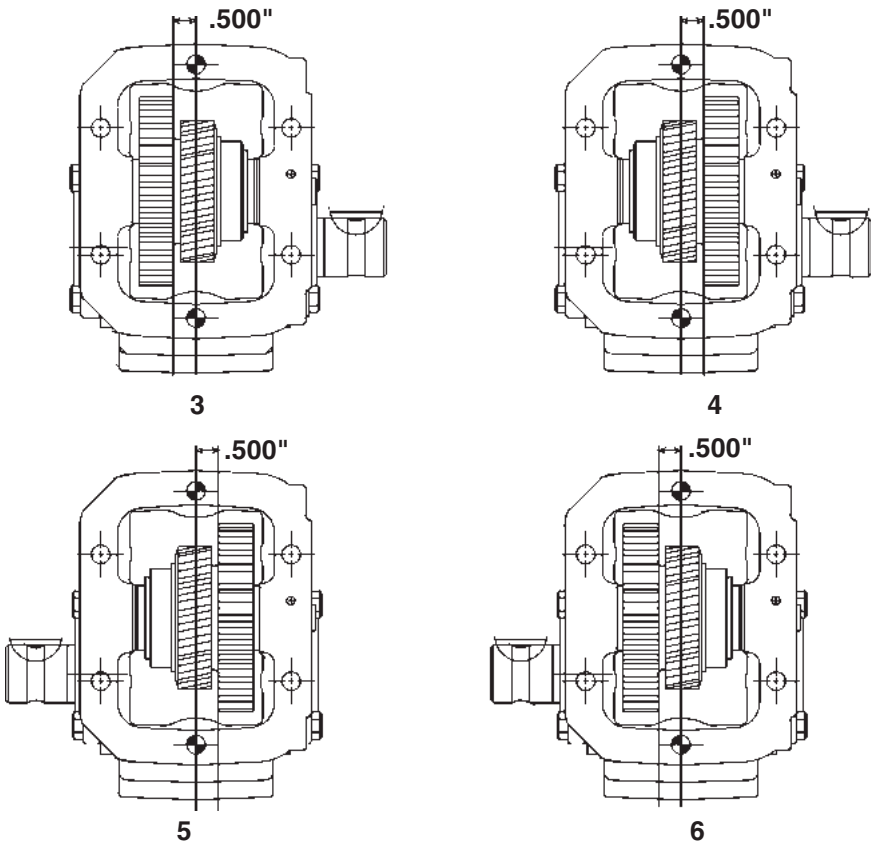

660 G Q JA X – Y 4 XD

BASIC MODEL
660

MOUNTING TYPE
- **D** = Metric w/Dowel Pins
- **X** = Standard
- **Z** = Deep Mount
- **G** = Standard/Metric
- **K** = Less Stud Kit Std. Mtg.
- **L** = Less Stud Kit Deep Mtg.

GEAR RATIO
- **F** = 0.520:1
- **Q** = 0.865:1
- **S** = 1.205:1

INPUT GEAR DESIGNATOR

LUBRICATION
- **X** = No Lubrication
- **P** = Pressure Lube

SHIFTER TYPE
- **A** = Air Shift
- **C** = Heavy Duty Bracket Less Cable
- **H** = No Wire Shift Cover
- **M** = Constant Mesh
- **P** = 12V Electric/Air
- **Q** = 24V Electric/Air
- **S** = Combo Valve
- **T** = Combo Valve less Kick-Out & Neutral Spring Return
- **U** = Combo Valve w/Kickout Less Neutral Spring Return
- **V** = Air Shift Less Inst. Kit
- **W** = Cable Shift
- **X** = Less Cable and Knob

ASSEMBLY ARRANGEMENT
3, 4, 5, 6

OUTPUT TYPE
- **AA** = Special for England
- **AK** = S.A.E. “B” 2 Bolt
- **AF** = S.A.E. “BB” 2 or 4 Bolt
- **AZ** = S.A.E. “B” 4 Bolt 1.250" 14T
- **FF** = S.A.E. “B” 2 or 4 Bolt
- **GA** = Greasable Rotatable “B” 2 Bolt
- **GB** = Greasable Rotatable “B” 4 Bolt
- **GF** = Greasable S.A.E. “BB” 2 or 4 Bolt
- **GH** = Greasable Rotatable “BB” 2 Bolt
- **GJ** = Greaseable Rot. SAE “BB” 4 Bolt 1" 15T
- **GK** = Greasable S.A.E. “B” 2 or 4 Bolt
- **GQ** = Greasable S.A.E. “B” 2 or 4 Bolt
- **GR** = Greasable CHELSEA Special
- **GP** = Greasable S.A.E. “A” 2 or 4 Bolt
- **GZ** = Greasable S.A.E. “B” 4 Bolt 1.250" 14T
- **LA** = S.A.E. “B” 2 Bolt w/Self Lube
- **LB** = S.A.E. “A” 2 Bolt w/Self Lube
- **LC** = S.A.E. “B” 2 or 4 Bolt w/Self Lube
- **LD** = 1.250" Rd. w/Self Lube
- **LF** = S.A.E. “B” 2 or 4 Bolt w/Self Lube
- **MY** = DIN 5462 8T
- **RA** = Rotatable S.A.E. “B” 2 Bolt
- **RB** = Rotatable S.A.E. “B” 4 Bolt
- **RC** = Rotatable S.A.E. “A” 2 Bolt
- **RD** = Rotatable S.A.E. “A” 2 Bolt
- **RE** = Rot. SAE “BB” 4 Bolt 1" 15T
- **RF** = Rotatable S.A.E. “BB” 2 Bolt
- **RY** = Rotatable Din 5462
- **XD** = 1.250" Rd.
- **XE** = S.A.E. “A” 2 or 4 Bolt
- **XG** = S.A.E. “A” 2 Bolt
- **XJ** = S.A.E. “A” 2 Bolt
- **XK** = S.A.E. “B” 2 or 4 Bolt
- **XL** = S.A.E. “A” 2 Bolt
- **XO** = S.A.E. “A” 2 Bolt
- **XP** = S.A.E. “A” 2 Bolt
- **XQ** = S.A.E. “B” 2 or 4 Bolt
- **XR** = CHELSEA Special
- **XV** = 1.250" Rd.*
- **XX** = 1.250" Rd. S.A.E. Taper
- **XY** = Din 5462

680 G Q JA X – Y 4 XD

BASIC MODEL
680

MOUNTING TYPE
- **X** = Standard
- **Z** = Deep Mount
- **G** = Standard/Metric

GEAR RATIO
- **F** = 0.520:1
- **Q** = 0.865:1
- **S** = 1.205:1

INPUT GEAR DESIGNATOR

LUBRICATION
- **X** = No Lubrication
- **P** = Pressure Lube

SHIFTER TYPE
- **A** = Air Shift
- **C** = Heavy Duty Bracket Less Cable
- **H** = No Wire Shift Cover
- **M** = Constant Mesh
- **P** = 12V Electric/Air
- **Q** = 24V Electric/Air
- **S** = Combo Valve
- **T** = Combo Valve less Kick-Out & Neutral Spring Return
- **U** = Combo Valve w/Kickout Less Neutral Spring Return
- **V** = Air Shift Less Inst. Kit
- **W** = Cable Shift
- **X** = Less Cable and Knob

ASSEMBLY ARRANGEMENT
3, 4, 5, 6

OUTPUT TYPE
- **AA** = Special for England
- **AF** = S.A.E. “BB” 2 or 4 Bolt
- **AK** = S.A.E. “B” 2 Bolt
- **AZ** = S.A.E. “B” 4 Bolt 1.250" 14T
- **FF** = S.A.E. “B” 2 or 4 Bolt
- **GA** = Greasable Rotatable “B” 2 B
- **GB** = Greasable Rotatable “B” 4 Bolt
- **GF** = Greasable S.A.E. “BB” 2 or 4 Bolt
- **GH** = Greasable Rotatable “BB” 2 Bolt
- **GJ** = Greaseable Rot. SAE “BB” 4 Bolt 1" 15T
- **GK** = Greasable S.A.E. “B” 2 or 4 Bolt
- **GP** = Greasable S.A.E. “A” 2 or 4 Bolt
- **GQ** = Greasable S.A.E. “B” 2 or 4 Bolt
- **GR** = Greasable CHELSEA Special
- **GZ** = Greasable S.A.E. “B” 4 Bolt 1.250" 14T
- **LA** = S.A.E. “B” 2 Bolt w/Self Lube
- **LB** = S.A.E. “A” 2 Bolt w/Self Lube
- **LC** = S.A.E. “B” 2 or 4 Bolt w/Self Lube
- **LD** = 1.250" Rd. w/Self Lube
- **LF** = S.A.E. “B” 2 or 4 Bolt w/Self Lube
- **MY** = DIN 5462 8T
- **RA** = Rotatable S.A.E. “B” 2 Bolt
- **RB** = Rotatable S.A.E. “B” 4 Bolt
- **RC** = Rotatable S.A.E. “A” 2 Bolt
- **RD** = Rotatable S.A.E. “A” 2 Bolt
- **RE** = Rot. SAE “BB” 4 Bolt 1" 15T
- **RF** = Rotatable S.A.E. “BB” 2 Bolt
- **RY** = Rotatable DIN 5462
- **XD** = 1.250" Rd.
- **XE** = S.A.E. “A” 2 or 4 Bolt
- **XG** = S.A.E. “A” 2 Bolt
- **XJ** = S.A.E. “A” 2 Bolt
- **XK** = S.A.E. “B” 2 or 4 Bolt
- **XL** = S.A.E. “A” 2 Bolt
- **XO** = S.A.E. “A” 2 Bolt
- **XP** = S.A.E. “A” 2 Bolt
- **XQ** = S.A.E. “B” 2 or 4 Bolt
- **XR** = CHELSEA Special
- **XV** = 1.250" Rd.*
- **XX** = 1.250" Rd. S.A.E. Taper
- **XY** = DIN 5462

*** Companion Flange 379828**

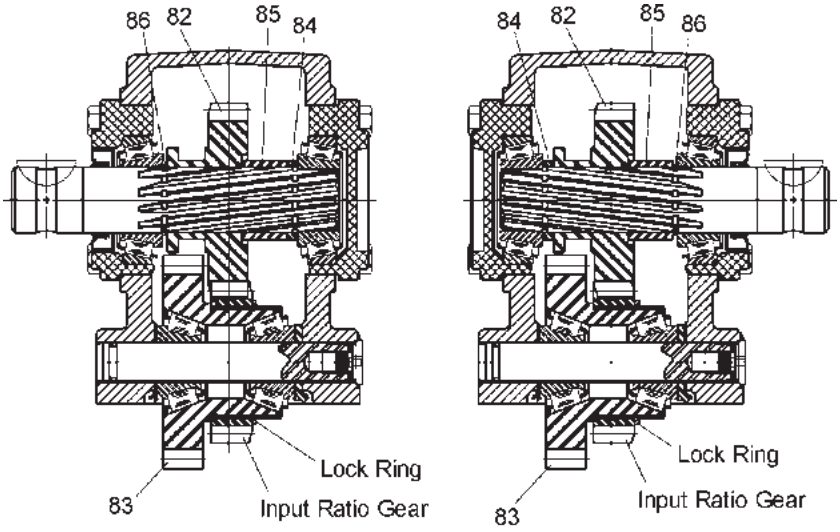

Item	Part Number	Description	Quantity	
			660	680
82	See Chart Pg. 9	Output Gear	1	1
89	See Chart Pg. 9	Input Gear	1	1
84	4-P-178	Spacer, Drive Shaft	1	1
85	4-P-177	Spacer, Drive Shaft	1	1
86	378391	Lockring	1	1
N.S.	34-P-39	Cover Plate (For Shifter Opening)	1	1
N.S.	35-P-8	Gasket, Cover Plate (For Shifter Opening)	1	1

Self Lube Parts

NOTE: Pump must rotate in direction of arrow.

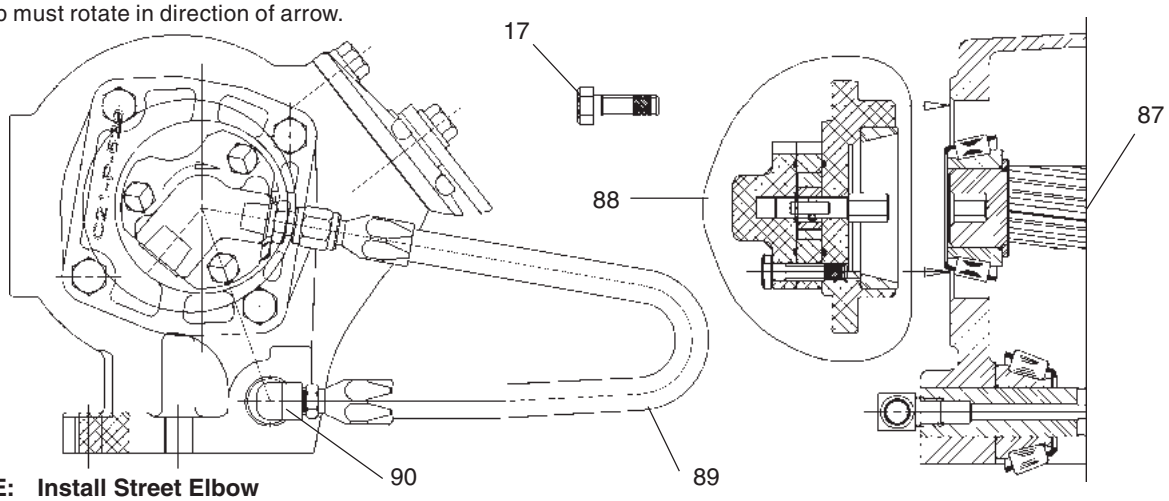

NOTE: Install Street Elbow into idler shaft before installing idler shaft

Pump assembly as shown is for "Q" and "W" ratios. Rotate as needed for "F", "S" and "U" ratios.

Item	Part Number	Description	Quantity	
			660	680
17	378430-10	Hex Capscrew .312"-18 x 1.00"	4	4
87	3-P-857	Output Shaft (LD Output)	1	1
	3-P-858	Output Shaft (LA, LB, LC, LF Output)	1	1
88	329091X	Lube Pump & Bearing Cap Assembly	1	1
89	329092X	Pressure Lube Hose Assembly	1	1
90	500841-1	90° Street Elbow	1	1

Input Gear Chart

660/680 Series

Model Number	Part No. Input Gear	Helix Angle	No. Teeth Input Gear	No. Teeth Ratio Gear	Part No. Output Gear	No. teeth Output Gear
660*FAH	5-P-1242	Spur	22	21	2-P-797	37
660*QAH	5-P-1246	Spur	22	19	2-P-778	24
660*SAH	5-P-1322	Spur	22	24	2-P-784	22
660*FBG	5-P-1325	Left Hand Helix	23	21	2-P-797	37
660*QBG	5-P-1326	Left Hand Helix	23	19	2-P-778	24
660*SBG	5-P-1327	Left Hand Helix	23	24	2-P-784	22
660*FDA	5-P-1330	Spur	23	21	2-P-797	37
660*QDA	5-P-1331	Spur	23	19	2-P-778	24
660*SDA	5-P-1332	Spur	23	24	2-P-784	22
660*FED	5-P-1335	Left Hand Helix	34	21	2-P-797	37
660*QED	5-P-1336	Left Hand Helix	34	19	2-P-778	24
660*SED	5-P-1337	Left Hand Helix	34	24	2-P-784	22
660*FJA	5-P-1345	Left Hand Helix	27	21	2-P-797	37
660*QJA	5-P-1346	Left Hand Helix	27	19	2-P-778	24
660*SJA	5-P-1347	Left Hand Helix	27	24	2-P-784	22
680*FAH	5-P-1242	Spur	22	21	2-P-797	37
680*QAH	5-P-1246	Spur	22	19	2-P-778	24
680*SAH	5-P-1322	Spur	22	24	2-P-784	22
680*FBG	5-P-1325	Left Hand Helix	23	21	2-P-797	37
680*QBG	5-P-1326	Left Hand Helix	23	19	2-P-778	24
680*SBG	5-P-1327	Left Hand Helix	23	24	2-P-784	22
680*FDA	5-P-1330	Spur	23	21	2-P-797	37
680*QDA	5-P-1331	Spur	23	19	2-P-778	24
680*SDA	5-P-1332	Spur	23	24	2-P-784	22

N.S. - Not Shown

	Flange Suffix	Flange Type	Shaft Type	Conversion Kit	
	AA	Special for England	.982"-6 Spline		
	AF	S.A.E. “B” 2 or 4 Bolt	1.0"-15 Spline	XD to AF	328591-30X
	AK	S.A.E. “B” 2 Bolt	7/8"-13 Spline	XD to AK	328591-28X
	AZ	S.A.E. 4 Bolt	1-1/4"-14 Spline	XD to AZ	328591-70X
	FF	S.A.E. “B” 2 or 4 Bolt	7/8" Round	XD to FF	328591-29X
●	GA	Rotatable S.A.E. “B” 2 Bolt	7/8"-13 Spline	XD to GA	328591-124X
				RA to GA	328591-109X
●	GB	Rotatable S.A.E. “B” 4 Bolt	7/8"-13 Spline	XD to GB	328591-125X
				RB to GB	328591-110X
●	GF	S.A.E. “BB” 2 or 4 Bolt	1.0"-15 Spline	XD to GF	328591-123X
				AF to GF	328591-111X
●	GH	Rotatable S.A.E. “BB” 2 Bolt	1.0"-15 Spline	XD to GH	328591-117X
				RF to GH	328591-115X
●	GJ	S.A.E. “B” 4 Bolt Rotatable	1.0"-15 Spline	XD to GJ	328591-139X
				RE to GJ	328591-115X
●	GK	S.A.E. “B” 2 or 4 Bolt	7/8"-13 Spline	XD to GK	328591-99X
				XK to GK	328591-96X
●	GP	S.A.E. “A” Pilot 2 or 4 Bolt	7/8"-13 Spline	XD to GP	328591-100X
				XP to GP	328591-96X
● ■	GQ	S.A.E. “B” 2 or 4 Bolt	7/8"-13 Spline	XD to GQ	328591-101X
				XQ to GQ	328591-96X
●	GR	Chelsea Special 4 Bolt	7/8"-13 Spline	XD to GR	328591-126X
●	GY	Din 5462 Pump Mounting	DIN 5462	XD to GY	328591-102X
				XY to GY	328591-97X
●	GZ	S.A.E. “B” 4 Bolt	1-1/4"-14 Spline	XD to GZ	328591-103X
				AZ to GZ	328591-98X
⏩	LA	S.A.E. “B” 2 Bolt	7/8"-13 Spline	AK to LA	328591-44X
⏩	LB	S.A.E. “A” Pilot 2 Bolt	7/8"-13 Spline	XP to LB	328591-45X
⏩	LC	S.A.E. “B” 2 or 4 Bolt	7/8"-13 Spline	XQ to LC	328591-46X
⏩	LD	Similar to “XD”	1-1/4" Round	XD to LD	
⏩	LF	S.A.E. “B” 2 or 4 Bolt	7/8"-13 Spline	XK to LF	328591-48X
	MY	Din 5462 Pump Mounting	DIN 5462	XD to MY	328591-146X
	RA	Rotatable S.A.E. “B” 2 Bolt	7/8"-13 Spline	XD to RA	328591-55X
				XR to RA	328591-53X
	RB	Rotatable S.A.E. “B” 4 Bolt	7/8"-13 Spline	XD to RB	328591-56X
				XR to RB	328591-54X
	RC	Rotatable S.A.E. “A” 2 Bolt	5/8"-9 Spline	XD to RC	328591-112X
	RD	Rotatable S.A.E. “A” 2 Bolt	7/8"-13 Spline	XD to RD	328591-113X
	RE	S.A.E. “B” 4 Bolt Rotatable	1.0"-15 Spline	XD to RE	328591-134X
	RF	Rotatable S.A.E. “B” 2 Bolt	1.0"-15 Spline	XD to RF	328591-78X
	RY	Rotatable DIN 5462	DIN 5462	XD to RY	328591-131X
	XE	S.A.E. “A” 2 or 4 Bolt	5/8"-9 Spline	XD to XE	328591-27X
	XG	Non-standard-S.A.E. “A” 2 Bolt	3/4" Round w/ 3/16 key	XD to XG	328591-10X
	XJ	Non-standard 2 Bolt	3/4" Round	XD to XJ	328591-11X
	XK	S.A.E. “B” 2 or 4 Bolt	7/8"-13 Spline	XD to XK	328591-16X
	XL	Non-standard 2 Bolt	7/8"-13 Spline	XD to XL	328591-18X
	XO	S.A.E. “A” Pilot 2 Bolt	3/4" Round w/ 3/16 key	XD to XO	328591-26X
	XP	S.A.E. “A” Pilot 2 Bolt	7/8"-13 Spline	XD to XP	328591-23X
■	XQ	S.A.E. “B” 2 or 4 Bolt	7/8"-13 Spline	XD to XQ	328591-17X
	XR	Chelsea Special 4 Bolt	7/8"-13 Spline	XD to XR	328591-52X
	XV	Round Shaft	1-1/4" w/ set screw	XD to XV	328591-130X
	XX	S.A.E Tapered Shaft	1-1/4" w/ 5/16" key	XD to XX	328591-122X
	XY	Din 5462 Pump Mounting	DIN 5462	XD to XY	328591-121X

NOTE: Check Current Price Sheet for Availability of Output Options

XR to “XK” Conversion Flange 21-P-525

- ● Shaft with Grease Fitting
- ■ Similar to Ass’y “XK” Flange Rotated 90°
- ⏩ Self-Lube Pump

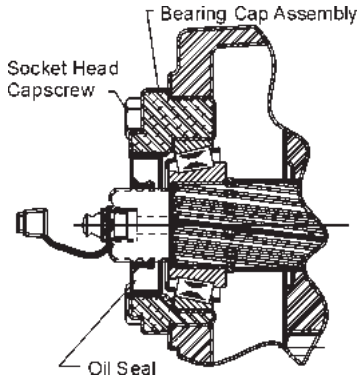

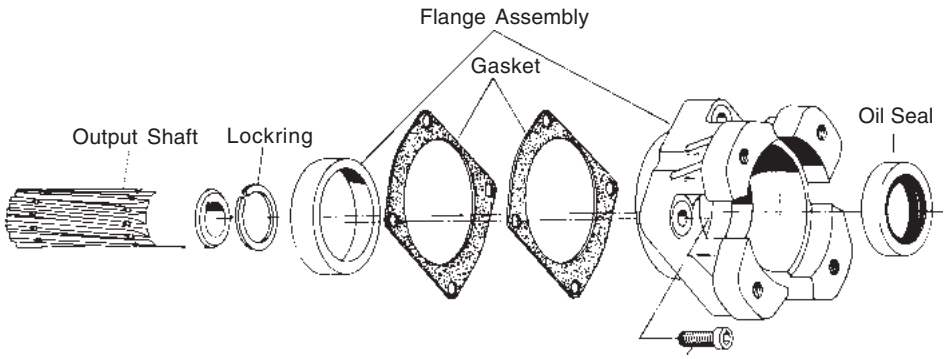

Output	Part Number	Description	Qty
AA	**3-P-862**	Output Shaft	1
	28-P-216	Oil Seal	1
	329102X	Bearing Cap Assy.(21-P-532)	1
	378447-8	Socket Head Capscrew (.312" - 18 x 1.5")	4
AF	**3-P-854**	Output Shaft	1
	28-P-219	Oil Seal	1
	329088X	Bearing Cap Assy.(21-P-522)	1
	378447-10	Socket Head Capscrew (.312" - 18 x 1.5")	4
AK	**3-P-282**	Output Shaft	1
	28-P-216	Oil Seal	1
	328989X	Bearing Cap Assy.(21-P-472)	1
	378447-8	Socket Head Capscrew (.312" - 18 x 1.5")	4
AZ	**3-P-844**	Output Shaft	1
	28-P-275	Oil Seal	1
	329052X	Bearing Cap Assy.(21-P-508)	1
	378447-11	Hex Washer Flange Bolt (.312" - 18 x 2.25")	4
FF	**3-P-851**	Output Shaft	1
	28-P-219	Oil Seal	1
	329088X	Bearing Cap Assy. (21-P-522)	1
	378447-10	Socket Head Capscrew (.312" - 18 x 2.0")	4
G	**3-P-923X**	"GA", "GB", "GR", Shaft Assemblies	1 or
	3-P-921X	"GF" Shaft Assemblies	1 or
	3-P-933X	"GQ", "GK", "GP" Shaft Assemblies	1 or
	3-P-938X	"GM", "GY" Shaft Assemblies	1 or
	3-P-939X	"GZ" Shaft Assemblies	1 or
	3-P-941X	"GH", "GJ" Shaft Assemblies	1
	500168-2	Lube Fitting (Zerk)	1
	379819	Grease Fitting Cap	1
	379688	Coupling Lube Pack (5/8 fl.oz)	1
	28-P-268	Rear Bearing Cap Shaft Oil Seal	1
	329273X	Rear Bearing Cap Assembly	1
	378430-10	Rear Bearing Cap Hex Head Capscrew	4
L	**3-P-857**	Output Shaft ("LD")	1
	3-P-858	Output Shaft ("LA", "LB", "LC", "LF")	1
	329091X	Lube Pump & Bearing Cap Assy.	1
	329092X	Pressure Lube Hose Assy.	1
	500841-1	Elbow 90° Street	1
	378430-10	Hex Capscrew (.312" - 18 x 1.0")	4

Continued on following page

Output	Part Number	Description	Qty
RA	**3-P-283**	Output Shaft	1
	28-P-216	Oil Seal	1
	329195X	Bearing Cap Assy. (21-P-574)	1
	21-P-628	Pump Flange (Ship Loose with unit)	1
	378447-6	Socket Head Capscrew	4
	328170-207X	Capscrew Bag Kit	1
	378447-6	Socket Head Capscrew	3
RB	**3-P-283**	Output Shaft	1
	28-P-216	Oil Seal	1
	329195X	Bearing Cap Assy. (21-P-574)	1
	21-P-572	Pump Flange (Ship Loose with unit)	1
	378447-6	Socket Head Capscrew	4
	328170-207X	Capscrew Bag Kit	1
	378447-6	Socket Head Capscrew	3
RC	**3-P-800**	Output Shaft	1
	28-P-216	Oil Seal	1
	329322X	Bearing Cap Assy (21-P-640)	1
	21-P-638	Pump Flange	1
	378447-6	Socket Head Capscrew (.312" - 18 x 1.0")	4
	328170-210X	Capscrew Bag Kit	1
	378446-4	Socket Head Capscrew (.250" - 20 x .75")	6
RD	**3-P-282**	Output Shaft	1
	28-P-216	Oil Seal	1
	329322X	Bearing Cap Assy (21-P-640)	1
	21-P-638	Pump Flange	1
	378447-6	Socket Head Capscrew (.312" - 18 x 1.0")	4
	328170-210X	Capscrew Bag Kit	1
	378446-4	Socket Head Capscrew (.250" - 20 x .75")	6
RE	**3-P-924**	Output Shaft	1
	28-P-219	Oil Seal	1
	329264X	Bearing Cap Assy. (21-P-629)	1
	21-P-654	Pump Flange	1
	378447-6	Socket Head Capscrew (.312" - 18 x 1.0")	7
	28-P-271	O-Ring	1
RF	**3-P-924**	Output Shaft	1
	28-P-219	Oil Seal	1
	329264X	Bearing Cap Assy. (21-P-629)	1
	21-P-626	Pump Flange	1
	378447-6	Socket Head Capscrew (.312" - 18 x 1.0")	7
	28-P-271	O-Ring	1
RY	**3-P-768**	Output Shaft	1
	21-P-625	Pump Flange	1
	329356X	Bearing Cap Assy (21-P-532)	1
	378447-8	Socket Head Capscrew (.312" - 18 x 1.5")	4
	329355-1X	Standard Loose Parts Kit	1
	379740-6	Socket Head Capscrew (M10 - 1.5" x .984")	3
	22-P-100	Gasket	1
	22-P-84	Gasket	1
	379231	Pipe Plug	2
XE	**3-P-800**	Output Shaft	1
	28-P-216	Oil Seal	1
	328328X	Bearing Cap Assy. (21-P-161)	1
	378447-8	Socket Head Capscrew (.312" - 18 x 1.5")	4

Continued on following page

Output	Part Number	Description	Qty
XG	**3-P-281**	Output Shaft	1
	28-P-216	Oil Seal	1
	328580X	Bearing Cap Assy. (21-P-259)	1
	378447-8	Socket Head Capscrew (.312" - 18 x 1.5")	4
XJ	**3-P-284**	Output Shaft	1
	28-P-216	Oil Seal	1
	328580X	Bearing Cap Assy.(21-P-259)	1
	378447-8	Socket Head Capscrew (.312" - 18 x 1.5")	4
XK	**3-P-282**	Output Shaft	1
	28-P-216	Oil Seal	1
	328333X	Bearing Cap Assy.(21-P-424)	1
	378447-8	Socket Head Capscrew (.312" - 18 x 1.5")	4
XL	**3-P-283**	Output Shaft	1
	28-P-216	Oil Seal	1
	328580X	Bearing Cap Assy.(21-P-259)	1
	378447-8	Socket Head Capscrew (.312" - 18 x 1.5")	4
XO	**3-P-284**	Output Shaft	1
	28-P-216	Oil Seal	1
	328328X	Bearing Cap Assy.(21-P-161)	1
	378447-8	Socket Head Capscrew (.312" - 18 x 1.5")	4
XP	**3-P-282**	Output Shaft	1
	28-P-216	Oil Seal	1
	328328X	Bearing Cap Assy.(21-P-161)	1
	378447-8	Socket Head Capscrew (.312" - 18 x 1.5")	4
XQ	**3-P-282**	Output Shaft	1
	28-P-216	Oil Seal	1
	328589X	Bearing Cap Assy.(21-P-269)	1
	378447-8	Socket Head Capscrew (.312" - 18 x 1.5")	4
XR	**3-P-283**	Output Shaft	1
	28-P-216	Oil Seal	1
	329194X	Bearing Cap Assembly (21-P-574)	1
	379673	Hex Shoulder Screw (.312" - 24)	4
	379063	Flat Washer	4
	328711X	Pump Mounting Kit	1
	378919	Washer	4
	500963-1	Hex Lock Nut (.312" - 24)	4
XV	**3-P-202**	Output Shaft	1
	28-P-216	Oil Seal	1
	329273X	Bearing Cap Assy. for 660 & 680 Series	1 or
	328273X	Bearing Cap Assy. (21-P-418)	1
	378430-10	Hex Capscrew (.312" - 18 x 1.0")	4
	500007-29	Woodruff Key	1
	379828	Companion Flange	1
	378431-8	Set Screw	1

Continued on following page

Output	Part Number	Description	Qty
XX	**3-P-766**	Output Shaft	1
	28-P-216	Oil Seal	1
	329273X	Bearing Cap Assy. for 660 & 680 Series	1 or
	328273X	Bearing Cap Assy. (21-P-418)	1
	378430-10	Hex Capscrew (.312" - 18 x 1.0")	4
	379111	Square Key	1
	501181	Hex Locknut (1.0" - 20)	1
XY	**3-P-768**	Output Shaft	1
	28-P-275	Oil Seal	1
	329234X	Bearing Cap Assy. (21-P-614)	1
	378447-6	Socket Head Capscrew (.312" - 18 x 1.0")	4

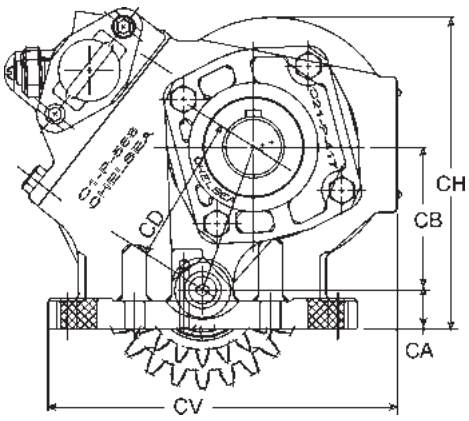

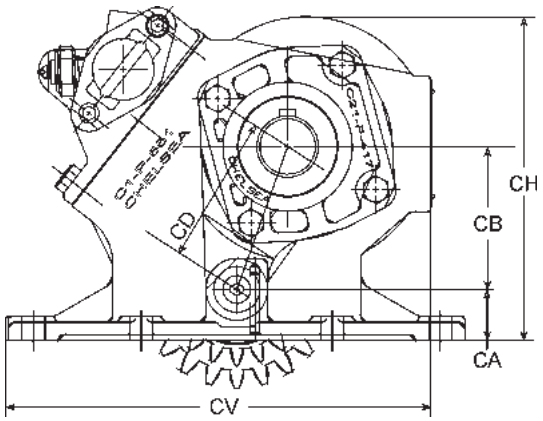

P.T.O. Series	Part Number	CA	CB	CD	CH	CV
660 Standard	1-P-580	0.789	3.007 (F, S) 2.908 (Q)	3.317 (F, S) 3.087 (Q)	6.428	7.000
660 Deep Mount	1-P-581	0.570	3.007 (F, S) 2.908 (Q, W)	3.317 (F, S) 3.087 (Q)	6.207	7.000
680 Standard	1-P-573	1.072	3.007 (F, S) 2.908 (Q)	3.317 (F, S) 3.087 (Q)	6.708	8.500
680 Deep Mount	1-P-582	0.930	3.007 (F, S) 2.908 (Q)	3.317 (F, S) 3.087 (Q)	6.566	8.500

Assembly Arrangements

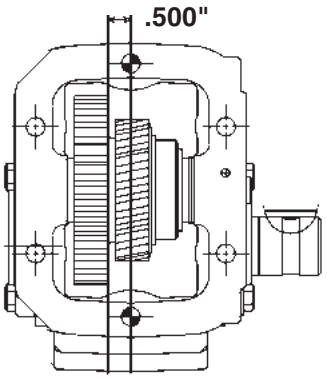

3

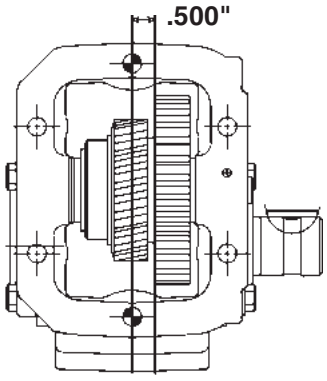

4

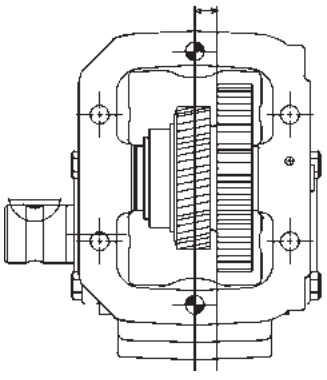

5

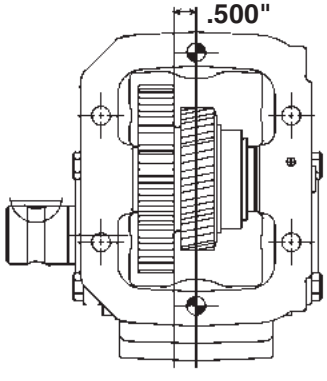

6

Pump Flange and Shaft Dimensions

660/680 Series

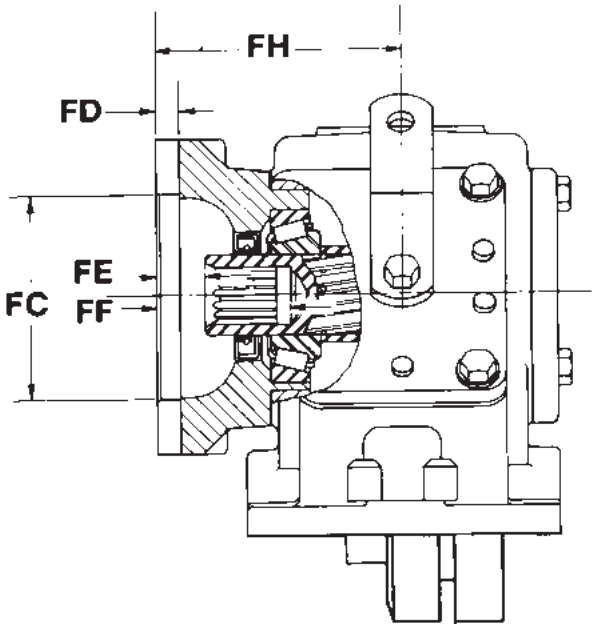

Pump Flange Suffix	Bolt Circle Dia.	BOLT HOLES		FC	FD	FE	FF	FH	OUTPUT SHAFT	
		Tapped Hole	No. Equally Spaced	Female Pilot Dia.	Pilot Depth	Face to end of Shaft	Face thru Hole	Face to Center of P.T.O.	Hole Dia.	Keyway Width
AA	2.834	M10-1.5	6	2.050	N/A	N/A	N/A	3.447	.982/.816 - 6 Spline	—
AF, GF	5.750	.500"-13	2	4.003	0.406	0.516	1.984	4.322	1"-15 Spline	—
	5.000	.500"-13	4	4.003	0.406	0.516	1.984	4.322	—	—
AK	5.750	.500"-13	2	4.003	0.406	0.562	2.062	3.688	7/8" - 13 Spline	—
AZ, GZ	5.000	.500"-13	4	4.003	0.406	0.695	2.392	4.985	11/4" - 14 Spline	—
FF	5.750	.500"-13	2	4.003	0.406	0.516	1.984	4.322	7/8" Round	1/4"
	5.000	.500"-13	4	4.003	0.406	0.516	1.984	4.322	—	—
● RA, GA	5.750	.500"-13	2 ■	4.003	0.406	0.558	2.058	4.588	7/8"-13 Spline	—
● RB, GB	5.000	.500"-13	4	4.003	0.406	0.558	2.058	4.588	7/8"-13 Spline	—
● RC	4.188	.375"-16	2 ■	3.253	0.270	0.525	1.462	3.694	5/8"-9 Spline	—
● RD	4.188	.375"-16	2 ■	3.253	0.270	0.525	1.462	3.694	7/8"-13 Spline	—
● RE, GJ	5.000	.500"13	4	4.003	0.406	0.501	1.969	4.569	1.0"-15 Spline	
● RF, GH	5.750	.500"-13	2 ■	4.003	0.406	0.501	1.969	4.569	1"-15 Spline	—
● RY	4.454	M12-1.75	4	3.152	0.394	0.618	2.274	4.790	DIN 5462	—
XE	5.000	.500"-13	4	3.253	0.344	0.562	1.500	3.688	5/8"-9 Spline	—
XG	4.188	.375"-16	4	3.253	0.562	0.593	2.218	4.562	3/4" Round	3/16"
XJ	4.188	.375"-16	4	3.253	0.562	1.406	2.906	4.562	3/4" Round	3/16"
XK, GK	5.750	.531"	2	4.003	0.406	0.562	2.062	3.688	7/8"-13 Spline	—
	5.000	.531"	4	4.003	0.406	0.562	2.062	3.688	—	—
XL	4.188	.375"-16	4	3.253	0.562	0.562	2.062	4.562	7/8"-13 Spline	—
XO	5.000	.500"-13	4	3.253	0.344	0.562	2.062	3.688	3/4" Round	3/16"
	4.188	.375-16	2	3.253	0.344	0.562	2.062	3.688	—	—
XP, GP	5.000	.500"-13	4	3.253	0.344	0.562	2.062	3.688	7/8"-13 Spline	—
	4.188	.375"-16	2	3.253	0.344	0.562	2.062	3.688	—	—
XY, GY	4.454	M12-1.75	4	3.152	0.393	0.594	2.508	4.697	DIN 5462	—
XQ, GQ	5.750	.500"-13	2	4.003	0.406	0.562	2.062	3.688	7/8"-13 Spline	—
	5.000	.500"-13	4	4.003	0.406	0.562	2.062	3.688	—	—
XR, GR	3.710	.312"-24(Studs)	4	2.752	0.281	N/A	N/A	2.809	7/8"-13 Spline	—
XV	3.75	.438" ▸	4	2.750	0.088	N/A	N/A	5.030	1.25" Round	5/16"

- ● Rotatable Flange Rotates in 30° Increments
- ■ Two Set of Holes Spaced 14° Apart
- ▸ Not Tapped

NOTE: To convert an "XR" to an "XK", use conversion flange number 21-P-5255.

Offer of Sale

The items described in this document and other documents or descriptions provided by Parker Hannifin Corporation, its subsidiaries and its authorized distributors are hereby offered for sale at prices to be established by Parker Hannifin Corporation, its subsidiaries and its authorized distributors. This offer and its acceptance by any customer ("Buyer") shall be governed by all of the following Terms and Conditions. Buyer's order for any such items, when communicated to Parker Hannifin Corporation, its subsidiary or an authorized distributor ("Seller") verbally or in writing, shall constitute acceptance of this offer.

1. Terms and Conditions of Sale: All descriptions, quotations, proposals, offers, acknowledgments, acceptances and sales of Seller's products are subject to and shall be governed exclusively by the terms and conditions stated herein. Buyer's acceptance of any offer to sell is limited to these terms and conditions. Any terms or conditions in addition to, or inconsistent with those stated herein, proposed by Buyer in any acceptance of an offer by Seller, are hereby objected to. No such additional, different or inconsistent terms and conditions shall become part of the contract between Buyer and Seller unless expressly accepted in writing by Seller. Seller's acceptance of any offer to purchase by Buyer is expressly conditional upon Buyer's assent to all the terms and conditions stated herein, including any terms in addition to, or inconsistent with those contained in Buyer's offer, Acceptance of Seller's products shall in all events constitute such assent.

2. Payment: Payment shall be made by Buyer net 30 days from the date of delivery of the items purchased hereunder. Amounts not timely paid shall bear interest at the maximum rate permitted by law for each month or portion thereof that the Buyer is late in making payment. Any claims by Buyer for omissions or shortages in a shipment shall be waived unless Seller receives notice thereof within 30 days after Buyer's receipt of the shipment.

3. Delivery: Unless otherwise provided on the face hereof, delivery shall be made F.O.B. Seller's plant. Regardless of the method of delivery, however, risk of loss shall pass to Buyer upon Seller's delivery to a carrier. Any delivery dates shown are approximate only and Seller shall have no liability for any delays in delivery.

4. Warranty: Seller warrants that the items sold hereunder shall be free from defects in material or workmanship for a period of:

(A) All Power Take-Off units one (1) year from date of installation.

(B) Except 267, 277, 278, 242, 244, 246, 250, 251 and 859 series two (2) years from date of installation. **THIS WARRANTY COMPRISES THE SOLE AND ENTIRE WARRANTY PERTAINING TO ITEMS PROVIDED HEREUNDER. SELLER MAKES NO OTHER WARRANTY, GUARANTEE, OR REPRESENTATION OF ANY KIND WHATSOEVER. ALL OTHER WARRANTIES, INCLUDING BUT NOT LIMITED TO, MERCHANTABILITY AND FITNESS FOR PURPOSE, WHETHER EXPRESS, IMPLIED, OR ARISING BY OPERATION OF LAW, TRADE USAGE, OR COURSE OF DEALING ARE HEREBY DISCLAIMED. NOTWITHSTANDING THE FOREGOING, THERE ARE NO WARRANTIES WHATSOEVER ON ITEMS BUILT OR ACQUIRED WHOLLY OR PARTIALLY, TO BUYER'S DESIGNS OR SPECIFICATIONS.**

5. Limitation Of Remedy: SELLER'S LIABILITY ARISING FROM OR IN ANY WAY CONNECTED WITH THE ITEMS SOLD OR THIS CONTRACT SHALL BE LIMITED EXCLUSIVELY TO REPAIR OR REPLACEMENT OF THE ITEMS SOLD OR REFUND OF THE PURCHASE PRICE PAID BY BUYER, AT SELLER'S SOLE OPTION. IN NO EVENT SHALL SELLER BE LIABLE FOR ANY INCIDENTAL, CONSEQUENTIAL OR SPECIAL DAMAGES OF ANY KIND OR NATURE WHATSOEVER, INCLUDING BUT NOT LIMITED TO LOST PROFITS ARISING FROM OR IN ANY WAY CONNECTED WITH THIS AGREEMENT OR ITEMS SOLD HEREUNDER, WHETHER ALLEGED TO ARISE FROM BREACH OF CONTRACT, EXPRESS OR IMPLIED WARRANTY, OR IN TORT, INCLUDING WITHOUT LIMITATION, NEGLIGENCE, FAILURE TO WARN OR STRICT LIABILITY.

6. Changes, Reschedules and Cancellations: Buyer may request to modify the designs or specifications for the items sold hereunder as well as the quantities and delivery dates thereof, or may request to cancel all or part of this order, however, no such requested modification or cancellation shall become part of the contract between Buyer and Seller unless accepted by Seller in a written amendment to this Agreement. Acceptance of any such requested modification or cancellation shall be at Seller's discretion, and shall be upon such terms and conditions as Seller may require.

7. Special Tooling: A tooling charge may be imposed for any special tooling, including without limitation, dies, fixtures, molds and patterns, acquired to manufacture items sold pursuant to this contract. Such special tooling shall be and remain Seller's property notwithstanding payment of any charges by Buyer. In no event will Buyer acquire any interest in apparatus belonging to Seller which is utilized in the manufacture of the items sold hereunder, even if such apparatus has been specially converted or adapted for such manufacture and notwithstanding any charges paid by Buyer. Unless otherwise agreed, Seller shall have the right to alter, discard or otherwise dispose of any special tooling or other property in its sole discretion at any time.

8. Buyer's Property: Any designs, tools, patterns, materials, drawings, confidential information or equipment furnished by Buyer or any other items which become Buyer's property, may be considered obsolete and may be destroyed by Seller after two (2) consecutive years have elapsed without Buyer placing an order for the items which are manufactured using such property, Seller shall not be responsible for any loss or damage to such property while it is in Seller's possession or control.

9. Taxes: Unless otherwise indicated on the face hereof, all prices and charges are exclusive of excise, sales, use, property, occupational or like taxes which may be imposed by any taxing authority upon the manufacture, sale or delivery of the items sold hereunder. If any such taxes must be paid by Seller or if Seller is liable for the collection of such tax, the amount thereof shall be in addition to the amounts for the items sold. Buyer agrees to pay all such taxes or to reimburse Seller therefore upon receipt of its invoice. If Buyer claims exemption from any sales, use or other tax imposed by any taxing authority, Buyer shall save Seller harmless from and against any such tax, together with any interest or penalties thereon which may be assessed if the items are held to be taxable.

10. Indemnity For Infringement of Intellectual Property Rights: Seller shall have no liability for infringement of any patents, trademarks, copyrights, trade dress, trade secrets or similar rights except as provided in this Part 10. Seller will defend and indemnify Buyer against allegations of infringement of U.S. Patents, U.S. Trademarks, copyrights, trade dress and trade secrets (hereinafter 'Intellectual Property Rights'). Seller will defend at its expense and will pay the cost of any settlement or damages awarded in an action brought against Buyer based on an allegation that an item sold pursuant to this contract infringes the Intellectual Property Rights of a third party. Seller's obligation to defend and indemnify Buyer is contingent on Buyer notifying Seller within ten (10) days after Buyer becomes aware of such allegations of infringement, and Seller having sole control over the defense of any allegations or actions including all negotiations for settlement or compromise. If an item sold hereunder is subject to a claim that it infringes the Intellectual Property Rights of a third party, Seller may, at its sole expense and option, procure for Buyer the right to continue using said item, replace or modify said item so as to make it noninfringing, or offer to accept return of said item and return the purchase price less a reasonable allowance for depreciation. Notwithstanding the foregoing, Seller shall have no liability for claims of infringement based on information provided by Buyer, or directed to items delivered hereunder for which the designs are specified in whole or part by Buyer, or infringements resulting from the modification, combination or use in a system of any item sold hereunder. The foregoing provisions of this Part 10 shall constitute Seller's sole and exclusive liability and Buyer's sole and exclusive remedy for infringement of Intellectual Property Rights.

If a claim is based on information provided by Buyer or if the design for an item delivered hereunder is specified in whole or in part by Buyer, Buyer shall defend and indemnify Seller for all costs, expenses or judgments resulting from any claim that such item infringes any patent, trademark, copyright, trade dress, trade secret or any similar right.

11. Force Majeure: Seller does not assume the risk of and shall not be liable for delay or failure to perform any of Seller's obligations by reason of circumstances beyond the reasonable control of Seller (hereinafter 'Events of Force Majeure'). Events of Force Majeure shall include without limitation, accidents, acts of God, strikes or labor disputes, acts, laws, rules or regulations of any government or government agency, fires, floods, delays or failures in delivery of carriers or suppliers, shortages of materials and any other cause beyond Seller's control.

12. Entire Agreement/Governing Law: The terms and conditions set forth herein, together with any amendments, modifications and any different terms or conditions expressly accepted by Seller in writing, shall constitute the entire Agreement concerning the items sold, and there are no oral or other representations or agreements which pertain there/to. This Agreement shall be governed in all respects by the law of the State of Ohio. No actions arising out of the sale of the items sold hereunder or this Agreement may be brought by either party more than two (2) years after the cause of action accrues.

9/01-P

Parker Hannifin Corporation
Chelsea Products Division
8225 Hacks Cross Road
Olive Branch, Mississippi 38654 USA
Tel: (662) 895-1011
Fax: (662) 895-1019
www.parker.com/chelsea

TG 06/05

Pro Gear and Transmission • 906 W. Gore St. Orlando, FL 32805 • 1 (877) 776-4600 / (407) 872-1901 • parts@eprogear.com